Acoustic Echo Control with Variable Individual Step Size

Christiane Antweiler *Andrea Schiffer* *Matthias Dörbecker*

Institute of Communication Systems and Data Processing,
Aachen University of Technology, Templergraben 55, D-52056 Aachen, Germany,
Tel/Fax: +49 (241) 806983 / 8888186, E-Mail: acker@ind.rwth-aachen.de

ABSTRACT

The step size parameter used in the *normalized least mean square* (NLMS) algorithm determines the weighting applied to the coefficient update. So the rate of convergence, the final steady-state performance and the noise insensivity of the NLMS-type adaptation algorithm are controlled by the step size parameter.

In this contribution the optimal step size parameter, which is individual for each coefficient and variant with time, for an NLMS-driven adaptation algorithm is determined in the presence of noise. Within this paper it will be shown that the resulting step size parameter equals the product of the step size parameters from two different approaches ([2,5,7] and [3]). The realization aspects will be discussed for an acoustic echo control application.

1. INTRODUCTION

The principle problem of hands-free telephone sets is the acoustic coupling between loudspeaker and telephone. Especially, in telephone networks with a long round trip delay the acoustic echo signal will significantly disturb the conversation. One technique to overcome this problem is the use of an echo compensation filter according to Fig. 1. Processing the loudspeaker signal $x(i)$ by the compensation filter $\underline{c}(i)$ results in a replica $\hat{y}(i)$ of the acoustic echo signal, which is subtracted from the microphone signal $s(i) + y(i)$.

Due to its simplicity and stability the *normalized least mean square* algorithm, or NLMS algorithm (e.g. [6]), represents the most common implementation to adapt the compensation filter. The weights of the adaptive filter are controlled by the iterative equation:

$$\underline{c}(i+1) = \underline{c}(i) + \alpha \frac{\hat{s}(i)\,\underline{x}(i)}{||\underline{x}(i)||^2} \qquad (1)$$

with the step size α and the output signal

$$\hat{s}(i) = s(i) + \left[\underline{g} - \underline{c}(i)\right]^T \underline{x}(i) \qquad (2)$$

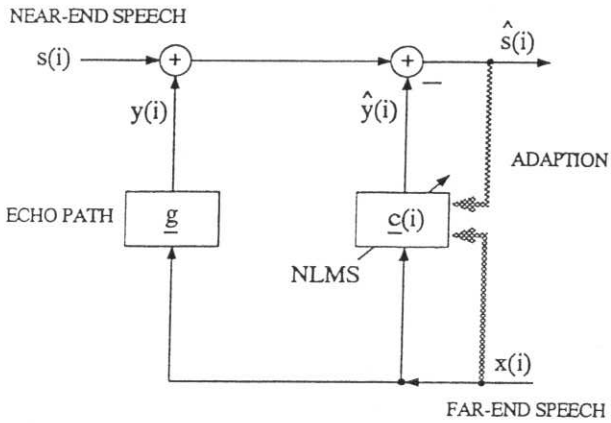

Figure 1. Conventional echo canceller

where $\underline{c}(i) = (c_0(i), c_1(i), ..., c_{N-1}(i))^T$

$\underline{x}(i) = (x(i), x(i-1), ..., x(i-N+1))^T$

$||\underline{x}(i)||^2 = \underline{x}^T(i)\,\underline{x}(i)$.

In case of $s(i) = 0$ the output signal $\hat{s}(i)$ equals the error signal given by

$$e(i) = \left(\underline{g} - \underline{c}(i)\right)^T \underline{x}(i) = \underline{d}^T(i)\,\underline{x}(i)\,, \qquad (3)$$

where $\underline{d}(i)$ denotes the distance vector.

The appropriate choice of the step size factor α is a major issue for the adaptation process of the NLMS algorithm. A small step size will ensure small misadjustment in steady-state and is needed for noise insensivity in the presence of noise. However, a small step size will lead to a reduced convergence rate. On the other hand, a large step size will in general provide faster convergence and better tracking capabilities at the cost of higher excess mean-squared error in the steady-state. Any selection of the step size must be a compromise between the conflicting goals of fast convergence and small steady-state error.

In order to improve the convergence properties of the NLMS algorithm, two different approaches have been introduced controlling a time-variant (e.g. [2,5,7]) or an exponentially weighted (e.g. [3]) step size parameter, where the parameter varies for different time instants or with different coefficient, respectively. The respective control algorithms base on different optimization criteria to derive an optimal step size parameter. The following paragraphs

2 and 3 outline the principle concepts of these two approaches.

Paragraph 4 contains the derivation of the optimal step size in the presence of noise and a discussion about its realization aspects. Based on computer simulations the results of the new concept are finally presented and analyzed.

2. VARIABLE STEP SIZE [7]

Variable, i.e. time variant, step size methods are one attempt to improve the convergence and noise insensivity of the NLMS algorithm while preserving the steady-state performance.

Based on the minimization of $E\left\{||\underline{d}(i+1)||^2\right\}$ for $s(i) \neq 0$ an optimal time-variant step size has been derived in [7] according to

$$\alpha(i) = \frac{1}{1 + \frac{E\{s^2(i)\}}{E\{x^2(i)\}} \frac{1}{E\left\{||\underline{d}(i)||^2\right\}}} , \qquad (4)$$

where condition 1) and 2) presented in Section 4.1 has been assumed. Due to the power ratio of the two input signals $x(i)$ and $s(i)$ the adaptive step size $\alpha(i)$ serves as double talk detector, which slows down the adaptation process in the presence of noise[1] ($s(i) \neq 0$). The second term, i.e. $1/E\left\{||\underline{d}(i)||^2\right\}$, balances between the conflicting goal of fast convergence and small steady-state error. Realization aspects of a respective variable stepsize control mechanism are discussed in detail in [5,2].

3. EXPONENTIALLY WEIGHTED STEP SIZE [3]

In an alternative approach the statistical characteristics of the room impulse response variation are considered within the so called exponentially weighted step size parameter [3], where different step sizes are applied for different coefficients. The derivation bases on the minimization of $E\{d_k^2(i+1)\}$ for $s(i) = 0$, where $d_k(i)$ denotes the kth component of vector $\underline{d}$ at time instant i. Assuming $s(i) = 0$ and condition 1) – 4) given in Section 4.1 the step size parameter can be determined according to [3]:

$$\alpha_k(i) = \frac{N\ E\{d_k^2(i)\}}{E\left\{||\underline{d}(i)||^2\right\}} \qquad (5)$$

In order to realize the step size $\alpha_k(i)$ at low computational load it is in the first step simplified to a time-invariant step size

$$\alpha_k(i=0) = \frac{N\ E\{d_k^2(0)\}}{\sum_{n=0}^{N-1} E\{d_n^2(0)\}} = \frac{N\ g_k^2}{\sum_{n=0}^{N-1} g_n^2} \qquad (6)$$

assuming $\underline{c}(0) = \underline{0}$. In a second step equation (6) is further approximated by

$$\alpha_k = \frac{N\ g_k^2}{\sum_{n=0}^{N-1} g_n^2} \approx \text{const} \cdot \exp^{-\left(6.9\ \frac{T_S}{T_R}\right)k} \qquad (7)$$

for all $k \in \{0, 1, ..., N-1\}$, where T_S denotes the sampling interval and T_R the reverberation time of the room, see [3] for more details.

In contrast to $\alpha(i)$ of Section 2 this algorithm uses an exponentially weighted step size for each coefficient $c_k(i)$. As a result, each filter coefficient $c_k(i)$ with $k \in \{0, 1, ..., N-1\}$ can individually be adapted. The algorithm adjusts coefficients with large errors in large steps, and coefficients with small errors in small steps.

The resulting algorithm provides a higher rate of convergence, however, since it was developed for $s(i) = 0$, it remains sensitive to noise.

4. VARIABLE INDIVIDUAL STEP SIZE IN THE PRESENCE OF NOISE

4.1. Optimal step size in the presence of noise

In this section the optimal – variable and individual – step size parameter for an NLMS-driven adaptation algorithm in the presence of noise is determined. For this reason the following conditions are assumed to hold according to [3]:

1) $\underline{x}(i)$, $\underline{d}(i)$ and $s(i)$ are assumed to have zero mean and to be mutually statistically independent stationary signals.

2) The elements of vector $\underline{x}(i)$ are assumed to be mutually uncorrelated, i.e.

$$E\{x(i-m)\,x(i-j)\} = \begin{cases} \sigma_x^2 & m = j \\ 0 & \text{else} \end{cases}$$

For a significantly large amount of filter coefficients N the following approximations hold

3) $||\underline{x}(i)||^2 \approx N\ \sigma_x^2 \qquad \forall\ i$

and according to [3]:

4) $$\sum_{n=0}^{N-1} E\{d_n^2(i)\}\ E\{x^2(i-n)\,x^2(i-j)\} \approx \sigma_x^4 \sum_{n=0}^{N-1} E\{d_n^2(i)\}$$

[1] Since $s(i)$ disturbs the adaptation process, it is regarded as noise.

The optimum step size in the presence of noise is obtained by minimizing $E\{d_k^2(i+1)\}$ applying

$$d_k(i+1) = d_k(i) - \alpha \frac{\hat{s}(i)\,x(i-k)}{||\underline{x}(i)||^2} \,. \quad (8)$$

Taking the expected values of the mean-square of equation (8) yields with $\hat{s}(i) = s(i) + \underline{d}^T(i)\underline{x}(i)$:

$$\begin{aligned} E\{d_k^2(i+1)\} &= E\{d_k^2(i)\} \\ &- 2\,\alpha\, E\left\{ d_k(i) \frac{\underline{d}^T(i)\,\underline{x}(i)}{||\underline{x}(i)||^2} x(i-k) \right\} \\ &- 2\,\alpha\, E\left\{ d_k(i) \frac{s(i)\,x(i-k)}{||\underline{x}(i)||^2} \right\} \\ &+ \alpha^2\, E\left\{ \frac{\underline{d}^T(i)\,\underline{x}(i)\,\underline{x}^T(i)\,\underline{d}(i)}{||\underline{x}(i)||^4} x^2(i-k) \right\} \\ &+ 2\,\alpha^2 E\left\{ \frac{\underline{d}^T(i)\,\underline{x}(i)}{||\underline{x}(i)||^2} x(i-k) \frac{s(i)\,x(i-k)}{||\underline{x}(i)||^2} \right\} \\ &+ \alpha^2\, E\left\{ \frac{s^2(i)\,x^2(i-k)}{||\underline{x}(i)||^4} \right\} \end{aligned} \quad (9)$$

Based on the assumptions 1) – 4) above equation can be simplified to

$$\begin{aligned} E\{d_k^2(i+1)\} &= E\{d_k^2(i)\} - 2\,\alpha \frac{E\{d_k^2(i)\}}{N} \\ &+ \alpha^2 \frac{\sum_{n=0}^{N-1} E\{d_n^2(i)\}}{N^2} + \alpha^2 \frac{E\{s^2(i)\}}{N\, E\left\{ ||\underline{x}(i)||^2 \right\}} \,. \end{aligned} \quad (10)$$

Setting the derivative of $E\{d_k^2(i+1)\}$ with respect to α equal to zero leads to the expression of the optimal step size for $s(i) \neq 0$:

$$\begin{aligned} \alpha_k^{\text{opt}}(i) &= \frac{N\, E\{d_k^2(i)\}}{\sum_{n=0}^{N-1} E\{d_n^2(i)\} + \frac{E\{s^2(i)\}}{E\{x^2(i)\}}} \quad (11) \\ &= \frac{N\, E\{d_k^2(i)\}}{E\left\{ ||\underline{d}(i)||^2 \right\}} \frac{E\left\{ ||\underline{d}(i)||^2 \right\}}{\sum_{n=0}^{N-1} E\{d_n^2(i)\} + \frac{E\{s^2(i)\}}{E\{x^2(i)\}}} \\ &= \frac{N\, E\{d_k^2(i)\}}{E\left\{ ||\underline{d}(i)||^2 \right\}} \frac{1}{1 + \frac{E\{s^2(i)\}}{E\{x^2(i)\}} \frac{1}{E\left\{ ||\underline{d}(i)||^2 \right\}}} \end{aligned}$$

Recalling equation (4) and (5) yields:

$$\boxed{\alpha_k^{\text{opt}}(i) = \alpha_k(i) \cdot \alpha(i) \quad (12)}$$

The resulting optimal step size parameter equals the product of the step size parameters from approach [7] and [3] according to eq. (4) and eq. (5).

4.2. Realization

In order to implement the variable and individual step size parameter $\alpha_k^{\text{opt}}(i)$ the realization concepts described in [2,5] and [3] are combined to

$$\hat{\alpha}_k^{\text{opt}}(i) = \alpha_k \cdot \alpha(i) \,. \quad (13)$$

The first factor α_k enables the individual adaptation of the filter coefficients $c_k(i)$ with respect to the characteristics of the room impulse response, while with the second factor the negative influence of signal $s(i)$ is reduced. The adaptation process can now be formulated to

$$\underline{c}(i+1) = \underline{c}(i) + \mathbf{A}\alpha(i) \frac{\underline{d}^T(i)\underline{x}(i) + s(i)}{||\underline{x}(i)||^2} \underline{x}(i) \quad (14)$$

with the diagonal matrix $\mathbf{A} = \begin{pmatrix} \alpha_0 & \dots & 0 \\ \vdots & \ddots & \vdots \\ 0 & \dots & \alpha_{N-1} \end{pmatrix}$.

For stability the normalization factor in the denominator is slightly adapted according to [4]:

$$\begin{aligned} \underline{c}(i+1) &= \underline{c}(i) \\ &+ \alpha(i) \frac{\underline{d}^T(i)\underline{x}(i) + s(i)}{||\underline{x}(i)||} \frac{\mathbf{A}\underline{x}(i)}{||\mathbf{A}\underline{x}(i)||} \end{aligned} \quad (15)$$

The characteristics of the room impulse response needed for the evaluation of matrix $\mathbf{A}$ can be determined applying a special initialization phase, where a perfect sequence is used as optimal excitation signal for the NLMS algorithm (see also [1]).

5. PERFORMANCE

In order to investigate the performance of the proposed algorithm according to equation (15) different computer simulations were performed for an acoustic echo control application. Figure 2 shows the results in terms of the system distance

$$\frac{D(i)}{\text{dB}} = 10 \lg \frac{||\underline{g} - \underline{c}(i)||^2}{||\underline{g}||^2} \quad (16)$$

for different step size parameters and different test conditions. Each curve represents an average out of eight simulations of four seconds duration.

The dashed line in Fig. 2 a) refers to the exponentially weighted step size parameter α_k. In the beginning of the simulation α_k equals approximately $\alpha_k(i)$, because α_k is set proportional to the exponential decay of the room impulse response. Consequently, the exponentially weighted step size parameter α_k leads to an increased convergence speed

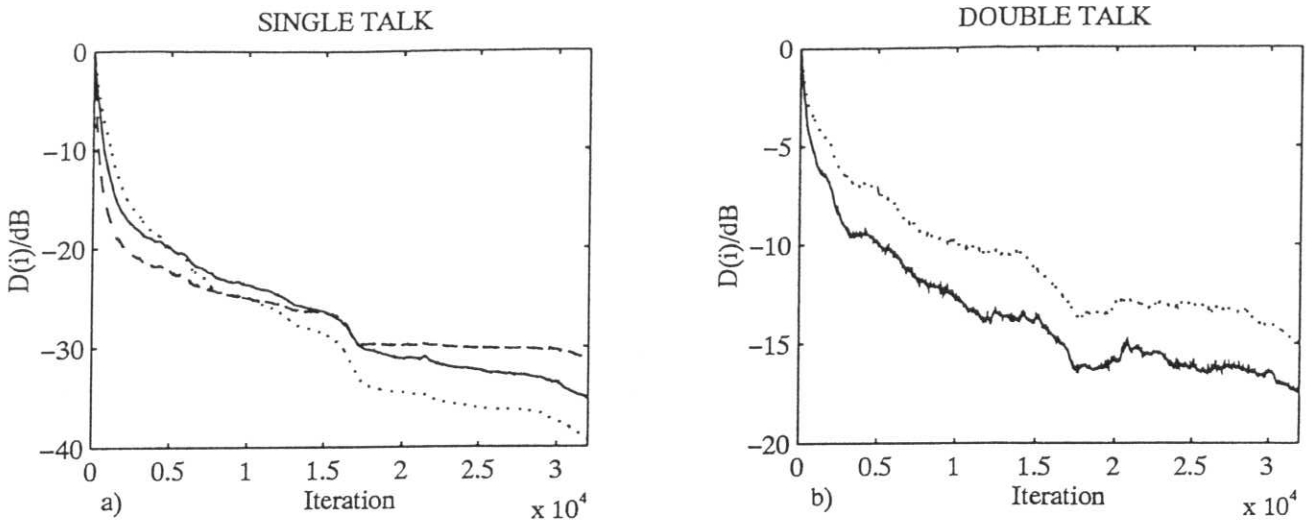

Figure 2. Comparison of the performance for different step size parameters
..... Variable step size $\alpha(i)$
— — — Exponentially weighted step size α_k, Fig. a) only
_____ Variable individual step size $\hat{\alpha}_k^{\mathrm{opt}}(i) = \alpha_k \cdot \alpha(i)$

especially in the initial stage. However, the optimum characteristic decay changes with time according to equation (5) as the algorithm converges, so that for the steady-state performance the better results are obtained for the adaptive step size $\alpha(i)$. The variable individual step size $\hat{\alpha}_k^{\mathrm{opt}}(i) = \alpha_k \cdot \alpha(i)$ combines the two different approaches and leads to a compromise between fast convergence and final steady-state, see solid line in Fig. 2 a).

The derivation of the exponentially weighted step size α_k was performed only for $s(i) = 0$, so that the system distance for the double talk condition is unacceptable and not plotted in Fig. 2 b).

As a result in the presence of noise the curve referring to the variable individual step size shows an improved performance compared to the adaptive step size control algorithm.

6. CONCLUSIONS

In this paper the optimal – time-variant and individual – step size parameter for an NLMS-driven adaptation algorithm was determined in the presence of noise. It has been shown that the resulting step size parameter equals the product of the step sizes of two known approaches, a time-variant and an exponentially weighted step size.

In order to implement the new step size parameter the realization concepts of the two known approaches were combined. For stability the normalization factor of the NLMS algorithm has been adapted.

As a result of the combination the rate of convergence as well as the noise insensitivity is improved within the new algorithm. Especially in the presence of noise or in case of a room impulse response varying with time significant improvements are obtained.

REFERENCES

[1] C. Antweiler, M. Antweiler, "System Identification with Perfect Sequences Based on the NLMS Algorithm", to be published in *AEÜ, International Journal of Electronics and Communications*, May, 1995

[2] R. Frenzel, "Freisprechen in gestörter Umgebung", *Fortschritt-Berichte VDI*, Reihe 10, Nr. 228, VDI-Verlag, Düsseldorf, Germany, 1992.

[3] S. Makino, Y. Kaneda, N. Koizumi, "Exponentially Weighted Stepsize NLMS Adaptive Filter Based on the Statistics of a Room Impulse Response", *IEEE Transactions on Speech and Audio Processing*, Vol. 1, No. 1, January 1993, pp. 101–108.

[4] M. Rupp, "Über die Analyse von Gradientenverfahren zur Echokompensation", Reihe 10, Nr. 242, VDI-Verlag, Düsseldorf, Germany, 1993.

[5] U. Schultheiß, "Über die Adaption eines Kompensators für akustische Echos", *VDI-Fortschritt-Berichte*, Reihe 10, Nr. 90, Düsseldorf, Germany, 1988.

[6] B. Widrow, S. D. Stearns, "*Adaptive Signal Processing*", Englewood Cliffs, NJ: Prentice-Hall, 1985

[7] S. Yamamoto, S. Kitayama, "An Adaptive Echo Canceller with Variable Step Gain Method", *Trans. IECE Japan*, Vol. E65, No. 1, January 1982, pp. 1–8.